Work Order ID 62986

Friday, October 15, 2010 8:31:59 AM

Item ID: D3826-041 **Accept** **Setup Start**

Revision ID: **Stop**

Item Name: Rib / Gusset Assembly

Start Date: 10/15/2010 **Start Qty:** 6.00 **Cust Item ID:**

Required Date: 10/19/2010 **Req'd Qty:** 6.00 **Customer:**

Reference:

Approvals: **Process Plan:** [signature] **Date:** 10-10-15 **Tooling:** _____ **Date:** _____ **Run Start**

QC: _____ **Date:** _____ **SPC (Y/N):** _____ **Date:** _____ **Stop**

Sequence ID/ Work Center ID	Operation Description	Set Up/ Run Hours	Tool ID	Tool #	Plan Code	Accept Qty	Reject Qty	Reject Number	Insp. Stamp
Draw Nbr	**Revision Nbr**								
D3826	Rev B								
100 Large Fab	Large Fab	0.00							
	Memo	0.00							
	1- use DT9434 to assemble D2325 support gusset together□2- locate D2325 on rib and weld as per dwg D3826□ A/R ER316 S.S. Rod Batch: 111585					6	[signature] 10.10.19		
110 QC Quality Control	QC9- Inspect visual per QSI004- Fusion Welds	0.00							
	Memo	0.00							
					6	PD	10.10.20		
120 QC Quality Control	QC5- Inspect part completeness to step on W/O	0.00							
	Memo	0.00							
						6		[signature] 10.10.20	

Dart Aerospace Ltd

W/O:		WORK ORDER CHANGES					
DATE	STEP	PROCEDURE CHANGE	By	Date	Qty	Approval Chief Eng / Prod Mgr	Approval QC Inspector

Part No: _____ PAR #: _____ Fault Category: _____ NCR: Yes No DQA: _____ Date: _____

Resolution: _____ Disposition: _____ QA: N/C Closed: _____ Date: _____

NCR:		WORK ORDER NON-CONFORMANCE (NCR)						
DATE	STEP	Description of NC Section A	Corrective Action Section B			Verification Section C	Approval Chief Eng	Approval QC Inspector
			Initial Chief Eng	Action Description Chief Eng	Sign & Date			

NOTE: Date & initial all entries

H:\fFORMS\Quality Assurance\approved QA\NCRWO RevE

Work Order ID 62986

Friday, October 15, 2010 8:31:59 AM

Item ID: D3826-041 **Accept** **Setup Start**

Revision ID:

Item Name: Rib / Gusset Assembly **Stop**

Start Date: 10/15/2010 **Start Qty:** 6.00 **Cust Item ID:**

Required Date: 10/19/2010 **Req'd Qty:** 6.00 **Customer:**

Reference:

Approvals: **Process Plan:** _____ **Date:** _____ **Tooling:** _____ **Date:** _____ **Run Start**

QC: _____ **Date:** _____ **SPC (Y/N):** _____ **Date:** _____ **Stop**

Sequence ID/ Work Center ID	Operation Description	Set Up/ Run Hours	Tool ID	Tool #	Plan Code	Accept Qty	Reject Qty	Reject Number	Insp. Stamp
130	Identify as per dwg & Stock Location: WA	0.00							
Packaging	**Memo**	0.00	SAD 10-10-20			6			
Packaging									
140	QC21- Final Inspection - Work Order Release	0.00							
QC	**Memo**	0.00					10/10/20		
Quality Control									

MF 10-10-20

Dart Aerospace Ltd

W/O:		WORK ORDER CHANGES					
DATE	STEP	PROCEDURE CHANGE	By	Date	Qty	Approval Chief Eng / Prod Mgr	Approval QC Inspector

Part No: _____ PAR #: _____ Fault Category: _____ NCR: Yes No DQA: _____ Date: _____

Resolution: _____ Disposition: _____ QA: N/C Closed: _____ Date: _____

NCR:		WORK ORDER NON-CONFORMANCE (NCR)						
DATE	STEP	Description of NC Section A	Corrective Action Section B			Verification Section C	Approval Chief Eng	Approval QC Inspector
			Initial Chief Eng	Action Description Chief Eng	Sign & Date			

NOTE: Date & initial all entries

H:\fFORMS\Quality Assurance\approved QA\NCRWO RevE

Picklist Print

Friday, October 15, 2010 8:32:04 AM

Work Order ID: 62986

Parent Item: D3826-041

Parent Item Name: Rib / Gusset Assembly

Start Date: 10/15/2010 **Required Date:** 10/19/2010

Start Qty: 6.00 **Required Qty:** 6.00

Comments: IPP Rev:A 08-12-01 new issue DD verified by:EC

Component Item ID/ Item Name	Replacement Item ID	Mfg/ Purch	Bin Item	Primary Location	Last Location	Route Seq ID	Unit of Measure	Qty on Hand	Qty per Kit	Total Qty	Qty Issued	Date Issued	Status
D2235-1 Basket Rib		Manufactured	No				Each	14.0000	1	6	Pl 10-10-19		
				Location		**Loc Qty**		**Loc Code**					
				WA		14							
					61471	4							
					62254	10				6			
D3929-041 Gusset Assembly		Manufactured	No				Each	5.0000	1	6	Pl 10-10-19		
				Location		**Loc Qty**		**Loc Code**		362-362 → 1			
				WA		5							
					61472	5				5			
D3929-042 Gusset Assembly		Manufactured	No				Each	6.0000	1	6	Pl 10-10-19		
				Location		**Loc Qty**		**Loc Code**					
				WA		6							
					61473	6				6			

Dart Aerospace Ltd

W/O:		WORK ORDER CHANGES					
DATE	STEP	PROCEDURE CHANGE	By	Date	Qty	Approval Chief Eng / Prod Mgr	Approval QC Inspector

Part No: _____ **PAR #:** _____ **Fault Category:** _____ **NCR:** Yes No **DQA:** _____ **Date:** _____

Resolution: _____ **Disposition:** _____ **QA: N/C Closed:** _____ **Date:** _____

NCR:		WORK ORDER NON-CONFORMANCE (NCR)						
DATE	STEP	Description of NC Section A	Corrective Action Section B			Verification Section C	Approval Chief Eng	Approval QC Inspector
			Initial Chief Eng	Action Description Chief Eng	Sign & Date			

NOTE: Date & initial all entries

H:\fFORMS\Quality Assurance\approved QA\NCRWO RevE

ITEM	QTY. -041	P/N	DESCRIPTION
1	X	D3826-041	RIB/GUSSET ASSY
11	1	D2235-1	RIB
12	1	D3929-041	GUSSET ASSEMBLY
13	1	D3929-042	GUSSET ASSEMBLY

B

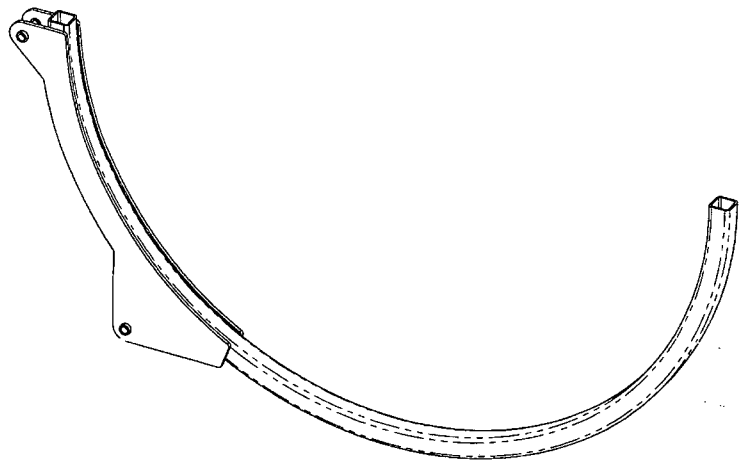

D3826-041 RIB/GUSSET ASSY

SHOP COPY
RETURN
ENGIN
UNCONTR
SUBJECT TO
WITH
WORK ORDER
NO. 62984
10-10-15

RELEASED
09/04/22

NOTES:
1) MATERIAL: N/A
2) FINISH: NONE
3) TOLERANCES: PER DART QSI 018 UNLESS OTHERWISE NOTED
4) UNITS: INCHES UNLESS OTHERWISE NOTED
5) BREAK SHARP EDGES: 0.005 TO 0.010 MAX
6) IDENTIFICATION:N/A
7) WEIGHT: 3.32 lbs B

REV.	DESCRIPTION	BY	DATE
B	D3929-041/-042 WERE D2325 (ZN D3-1 & ZN D6-2); UPDATED WEIGHT (ZN A8-1). REASON: SEE NCR#09-042.	MB	09.04.16
A	NEW ISSUE	MB	08.09.23

DESIGN	
DRAWN	
CHECKED	
MFG. APPR.	
APPROVED	
DE APPR.	
DATE	09.04.16

DART AEROSPACE LTD
HAWKESBURY, ONTARIO, CANADA

DRAWING NO. D3826 REV. B
SHEET 1 OF 2
TITLE RIB/GUSSET ASSY
SCALE NTS

Dart Aerospace Ltd

W/O:		WORK ORDER CHANGES					
DATE	STEP	PROCEDURE CHANGE	By	Date	Qty	Approval Chief Eng / Prod Mgr	Approval QC Inspector

Part No: _____ PAR #: _____ Fault Category: _____ NCR: Yes No DQA: _____ Date: _____

Resolution: _____ Disposition: _____ QA: N/C Closed: _____ Date: _____

NCR:		WORK ORDER NON-CONFORMANCE (NCR)						
DATE	STEP	Description of NC Section A	Corrective Action Section B			Verification Section C	Approval Chief Eng	Approval QC Inspector
			Initial Chief Eng	Action Description Chief Eng	Sign & Date			

NOTE: Date & initial all entries

H:\fFORMS\Quality Assurance\approved QA\NCRWO RevE

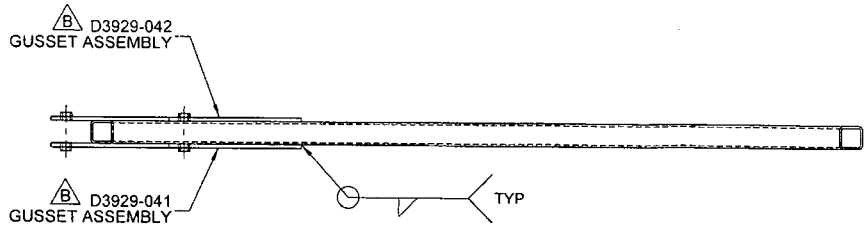

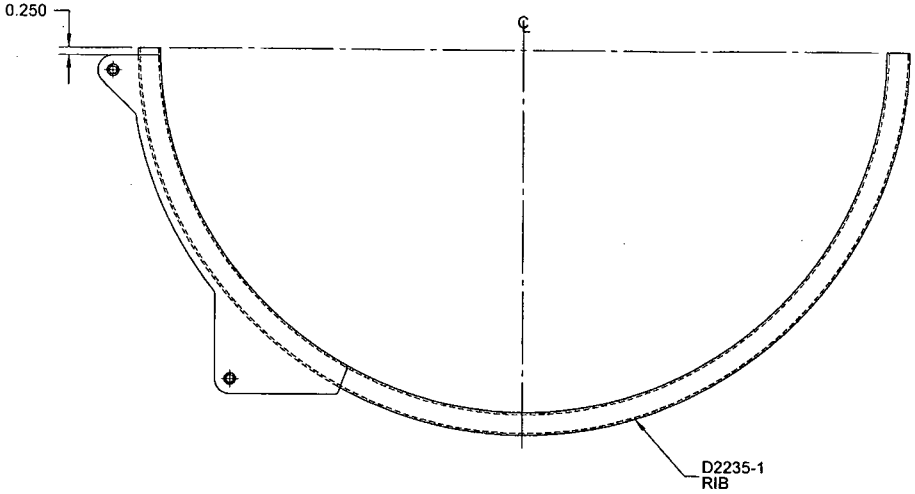

w/o 62986

D3826-041 RIB/GUSSET ASSY

RELEASED 2/04/22

DESIGN		**DART AEROSPACE LTD** HAWKESBURY, ONTARIO, CANADA
DRAWN		
CHECKED		DRAWING NO. D3826 — REV. B — SHEET 2 OF 2
MFG. APPR.		
APPROVED		TITLE RIB/GUSSET ASSY — SCALE NTS
DE APPR.		
DATE 09.04.16		

Dart Aerospace Ltd

W/O:		WORK ORDER CHANGES					
DATE	STEP	PROCEDURE CHANGE	By	Date	Qty	Approval Chief Eng / Prod Mgr	Approval QC Inspector

Part No: _____ PAR #: _____ Fault Category: _____ NCR: Yes No DQA: _____ Date: _____

Resolution: _____ Disposition: _____ QA: N/C Closed: _____ Date: _____

NCR:		WORK ORDER NON-CONFORMANCE (NCR)						
DATE	STEP	Description of NC Section A	Corrective Action Section B			Verification Section C	Approval Chief Eng	Approval QC Inspector
			Initial Chief Eng	Action Description Chief Eng	Sign & Date			

NOTE: Date & initial all entries

H:\fFORMS\Quality Assurance\approved QA\NCRWO RevE